REVISION AS

TABLE 1							MATED HEIGHT WITH QSH-01
STYLE	"A"	"B"	BODY (-LC)	BODY (-A)	GROUND PLANE	TERMINAL	
-01	.1680[4.267]	.1600[4.064]	QTH-30-01-D-XX	QTH-30-01-D-XX-A	T-1G1-01-X	T-1S39-01-X	.197[5.00] REF
-02	.2861[7.267]	.2781[7.064]	QTH-30-02-D-XX	QTH-30-02-D-XX-A	T-1G1-02-X	T-1S59-02-X	.315[8.00] REF

QTH-XXX-XX-X-D-XXX

No OF POSITIONS
-030, -060, -090,
*-120, *-150
(PER ROW)
* (SEE NOTE 11)

LEAD STYLE
-01: .1680[4.267]
-02: .2861[7.264]
☐ -03: .4043[10.269]
☐ -04: .6001[15.246]
☐ -05: .7181[18.240]
☐ -06: .8361[21.237]
☐ -07: .9542[24.237]
☐ -08: 1.1511[29.238]
☐ -09: .5224[13.269]
☐ -10: .5618[14.269]

☐ = SEE TABLE 4

PLATING SPECIFICATION
-F: FLASH SELECTIVE GOLD WITH MATTE TIN TAILS
(USE T-1SXX-XX-F & T-1GXX-XX-F)
(SEE NOTE 7)
-L: LIGHT SELECTIVE GOLD WITH MATTE TIN TAILS
(USE T-1SXX-XX-L & T-1GXX-XX-L)
-H: HEAVY GOLD WITH FLASH GOLD TAILS
(USE T-1SXX-XX-H & T-1GXX-XX-G)
-C: ELECTRO-POLISHED SELECTIVE
(USE T-1SXX-XX-C, T-1GXX-XX-L)

OPTION
-LC: LOCKING CLIPS
(USE LC-08-TM-01)
-A: ALIGNMENT PINS
(USE QTH-30-XX-D-XX-A FOR -01 & -02)
(FOR -03 THRU -10 SEE TABLE 4)
-K: POLYIMIDE FILM (USE K-DOT-.276-.375-.005)
(AVAILABLE ON -01 THRU -04, -09 & -10 ONLY)
(SEE FIG. 2, SHEET 2)
-TR: TAPE & REEL (90 POS MAX)
(60 POS MAX W/ -GP OPTION)
(N/A ON -05 THRU -08)
-GP: GUIDE POSTS
(AVAILABLE ON -01 & -02 ONLY)
(USE QTH-30-XX-D-XX-X-GP)
(SEE FIG. 7, SHEET 4)
-FL: FRICTION LOCKS (SEE FIG. 8, SHEET 4)
(ONLY AVAILABLE ON -01 & -02)
(NOT AVAILABLE WITH -GP)
-RT1: RETENTION OPTION (SEE FIG. 9, SHEET 5)
(ONLY AVAILABLE ON -01 LEAD STYLE)
(MUST USE -A OPTION)
(USE QTH-30-01-D-XX-A-RT1 & T-1R36-01-F)
(NOT AVAILABLE WITH -LC, -GP, OR -FL)

ROW SPECIFICATION
-D: DOUBLE (USE QTH-30-XX-D-XX
& QTHH-30-XX-D-XX)

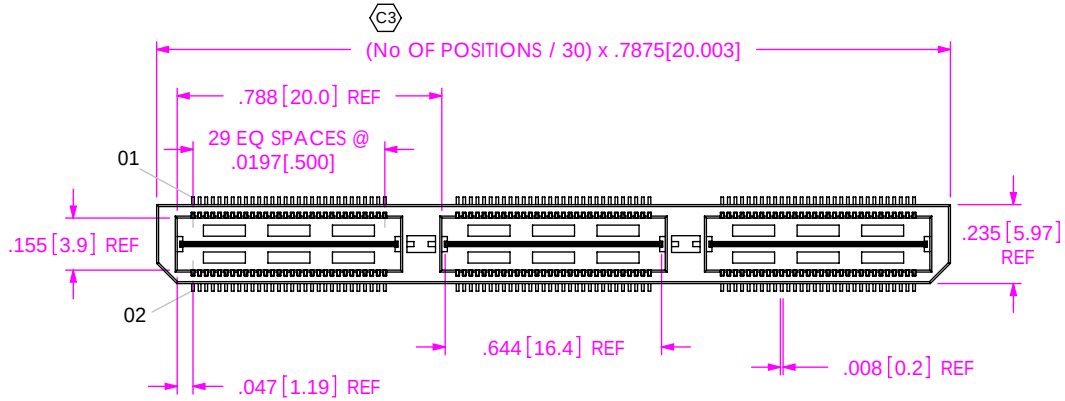

FIG. 1
QTH-090-01-X-D-LC SHOWN

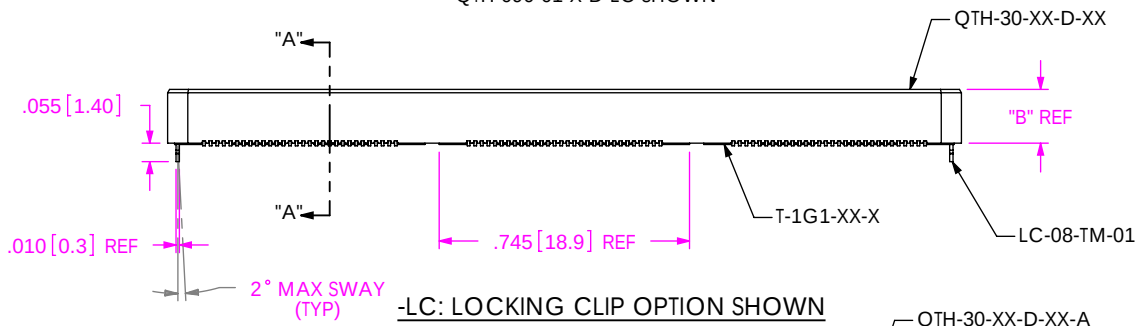

-LC: LOCKING CLIP OPTION SHOWN

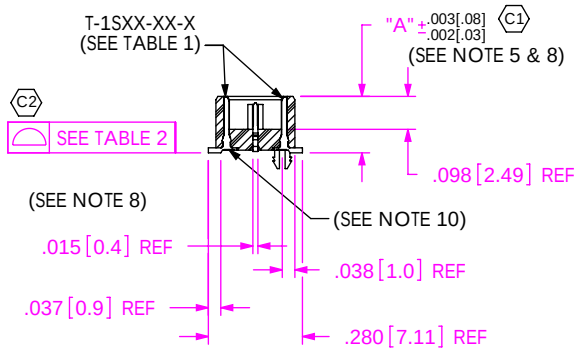

SECTION "A"-"A"

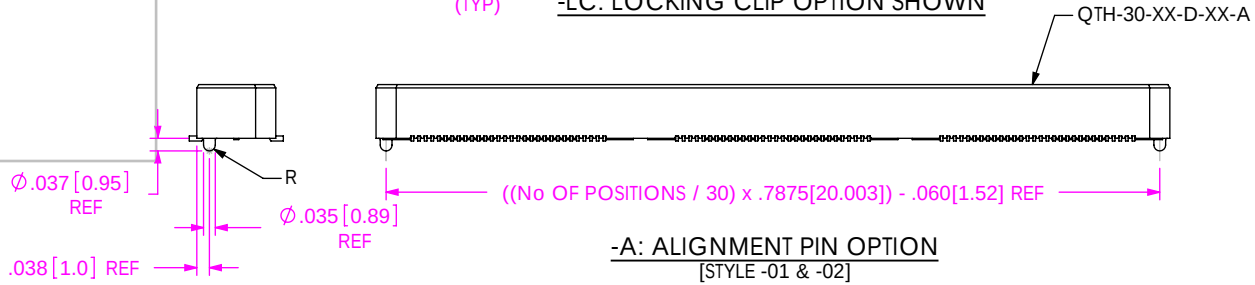

-A: ALIGNMENT PIN OPTION
[STYLE -01 & -02]

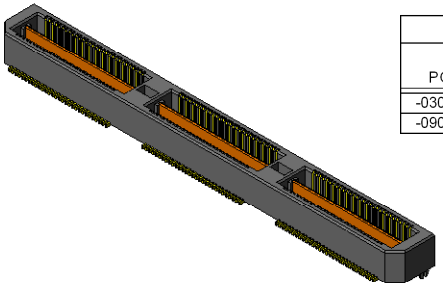

TABLE 2	
No OF POSITIONS	COPLANARITY (INCLUDING GP)
-030 THRU -060	.004 [.10]
-090 THRU -150	.006 [.15]

NOTES:
C 1. REPRESENTS A CRITICAL DIMENSION.
2. MINIMUM PUSHOUT FORCE: 6 OZ FOR ð01 & -02, 8 OZ FOR ð03 THRU ð10.
3. MINIMUM GROUND PLANE RETENTION: 1 LB.
4. PARTS TO BE MOLDED TO POSITION.
5. MAXIMUM VARIANCE OF .002[.05]. APPLIES TO SIGNAL OR GROUNDS INDEPENDENT OF THE GROUND OR SIGNAL PINS RESPECTIVELY.
6. LEAD STYLES -03 THRU -10: TOP BODY (QTH) CANNOT HAVE -A OPTION.
AS 7. -L PLATING CAN BE SUBSTITUTED FOR -F PLATING.
8. GROUND PLANE PRESS HEIGHT MUST BE .003 [.07] LESS THAN THE MAXIMUM HEIGHT OR .002[.03] GREATER THAN THE MINIMUM HEIGHT OF SIGNAL PIN.
9. T-1R36 RETENTION TO BODY TO BE 1.0 LBF.
10. CUT OFF BURR NOT TO EXCEED .003 IN ANY DIRECTION, BURR PLUS TAB HEIGHT NOT TO EXCEED .006
11. FOR NEW APPLICATIONS REQUIRING THESE POSITIONS, PLEASE CONTACT SAMTEC INTERCONNECT PROCESSING GROUP.

UNLESS OTHERWISE SPECIFIED, DIMENSIONS ARE IN INCHES.
TOLERANCES ARE:
DECIMALS: .XX: ±.01[.3] .XXX: ±.005[.13] .XXXX: ±.0020[.051]
ANGLES: 2°

PROPRIETARY NOTE
THIS DOCUMENT CONTAINS INFORMATION CONFIDENTIAL AND PROPRIETARY TO SAMTEC, INC. AND SHALL NOT BE REPRODUCED OR TRANSFERRED TO OTHER DOCUMENTS OR DISCLOSED TO OTHERS OR USED FOR ANY PURPOSE OTHER THAN THAT WHICH IT WAS OBTAINED WITHOUT THE EXPRESSED WRITTEN CONSENT OF SAMTEC, INC.

samtec
520 PARK EAST BLVD, NEW ALBANY, IN 47150
PHONE: 812-944-6733 FAX: 812-948-5047
e-Mail: info@SAMTEC.com code: 55322

MATERIAL: DO NOT SCALE DRAWING SHEET SCALE: 1.75:1
INSULATOR: LCP, COLOR: BLACK
TERMINAL & GROUND PLANE: PHOS BRONZE

DESCRIPTION: .5mm DOUBLE ROW HS TERMINAL ASSEMBLY
DWG. NO. QTH-XXX-XX-X-D-XXX
BY: DEAN P 5/27/1999 SHEET 1 OF 5

F:\DWG\MISC\MKTG\QTH-XXX-XX-X-D-XXX-MKT.SLDDRW

REVISION AS

NOTE: "R" = (No OF POSITIONS / 30) x .7875[20.003]
WITH -RT1 OPTION: "R" = ((No OF POSITIONS / 30) x .7875[20.003] + .6505[16.522] REF
WITH -GP OPTION: "R" = ((No OF POSITIONS / 30) x .7875[20.003] + .5175[13.145] REF
"S" = (("R" - .276[7.01]) / 2) ±.020[.51]

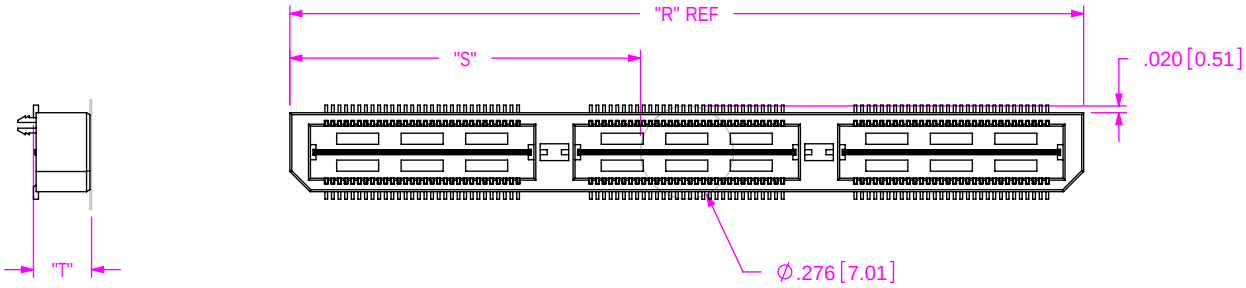

TABLE 3	
STYLE	"T"
-01	.173[4.39]
-02	.291[7.39]
-03	.409[10.39]
-04	.605[15.37]
-09	.527[13.39]
-10	.566[14.39]

FIG. 2

-K: POLYIMIDE FILM PAD OPTION
[USE K-DOT-.276-.375-.005]

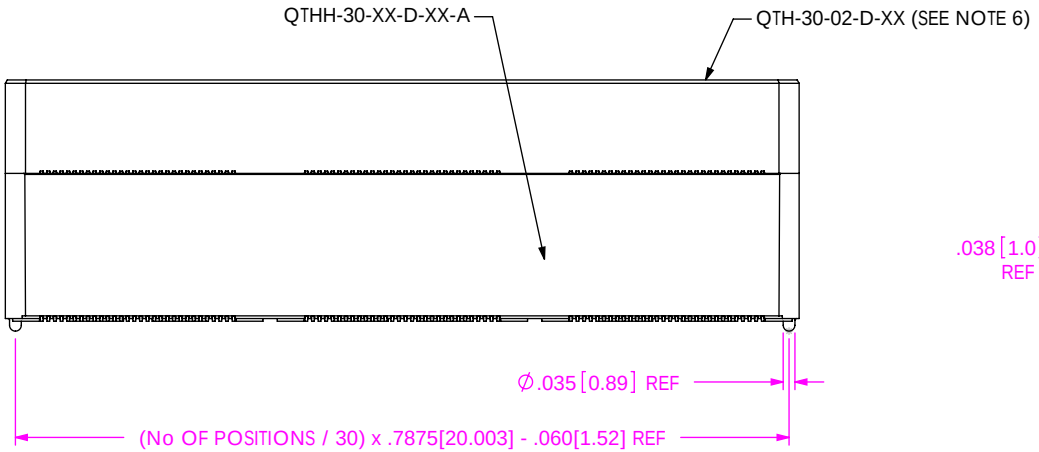

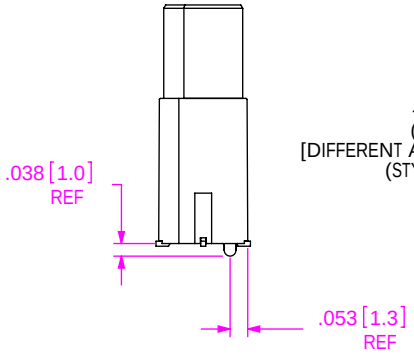

FIG. 3

-A: ALIGNMENT PIN OPTION
(QTH-090-05-X-D-A SHOWN)
[DIFFERENT AS SHOWN, OTHERWISE SAME AS FIG. 1]
(STYLES -03 THRU -09, SEE TABLE 4)

PROPRIETARY NOTE

THIS DOCUMENT CONTAINS INFORMATION CONFIDENTIAL AND PROPRIETARY TO SAMTEC, INC. AND SHALL NOT BE REPRODUCED OR TRANSFERRED TO OTHER DOCUMENTS OR DISCLOSED TO OTHERS OR USED FOR ANY PURPOSE OTHER THAN THAT WHICH IT WAS OBTAINED WITHOUT THE EXPRESSED WRITTEN CONSENT OF SAMTEC, INC.

DO NOT SCALE DRAWING

SHEET SCALE: 1.75:1

samtec
520 PARK EAST BLVD, NEW ALBANY, IN 47150
PHONE: 812-944-6733 FAX: 812-948-5047
e-Mail: info@SAMTEC.com code: 55322

DESCRIPTION: .5mm DOUBLE ROW HS TERMINAL ASSEMBLY

DWG. NO. QTH-XXX-XX-X-D-XXX

BY: DEAN P 5/27/1999 SHEET 2 OF 5

F:\DWG\MISC\MKTG\QTH-XXX-XX-X-D-XXX-MKT.SLDDRW

REVISION AS

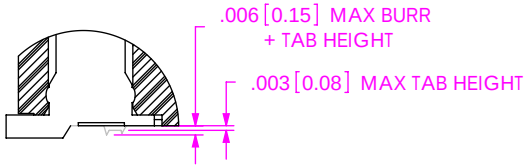

DETAIL 'H'
SCALE 8 : 1

TABLE 4								
STYLE	SEE FIGURE	"C" OVERALL HEIGHT	GROUND PLANE	TERMINAL	TOP BODY (SEE NOTE 6)	BOTTOM SPACER BODY (-LC OR NONE)	BOTTOM SPACER BODY (-A)	MATED HEIGHT WITH QSH-01
-03	4	.4043 [10.269]	T-1G1-03-X	T-1S60-03-X	QTH-30-02-D-XX	QTHH-30-01-D-XX	QTHH-30-01-D-XX-A	.433 [11.00] REF
-04	4	.6001 [15.246]	T-1G1-04-X	T-1S60-04-X	QTH-30-02-D-XX	QTHH-30-01-D-XX	QTHH-30-01-D-XX-A	.630 [16.00] REF
-05	5	.7181 [18.240]	T-1G1-05-X	T-1S60-05-X	QTH-30-02-D-XX	QTHH-30-03-D-XX	QTHH-30-03-D-XX-A	.748 [19.00] REF
-06	5	.8361 [21.237]	T-1G1-06-X	T-1S60-06-X	QTH-30-02-D-XX	QTHH-30-03-D-XX	QTHH-30-03-D-XX-A	.866 [22.00] REF
-07	6	.9542 [24.237]	T-1G17-01-X	T-1S61-01-X	QTH-30-02-D-XX	QTHH-30-04-D-XX	QTHH-30-04-D-XX-A	.984 [25.00] REF
-08	6	1.1511 [29.238]	T-1G17-02-X	T-1S61-02-X	QTH-30-02-D-XX	QTHH-30-04-D-XX	QTHH-30-04-D-XX-A	1.181 [30.00] REF
-09	4	.5224 [13.269]	T-1G1-09-X	T-1S60-09-X	QTH-30-02-D-XX	QTHH-30-01-D-XX	QTHH-30-01-D-XX-A	.551 [14.00] REF
-10	4	.5618 [14.269]	T-1G1-10-X	T-1S60-10-X	QTH-30-02-D-XX	QTHH-30-01-D-XX	QTHH-30-01-D-XX-A	.591 [15.00] REF

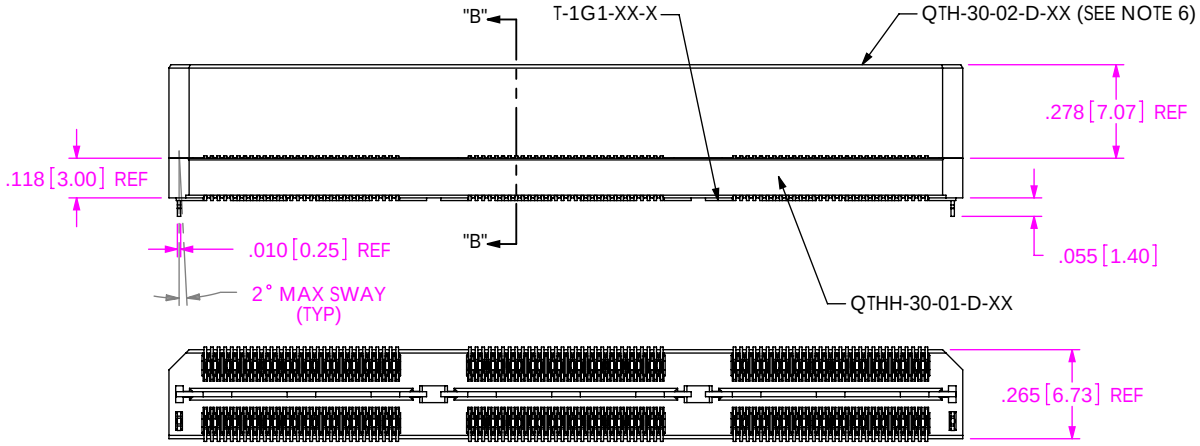

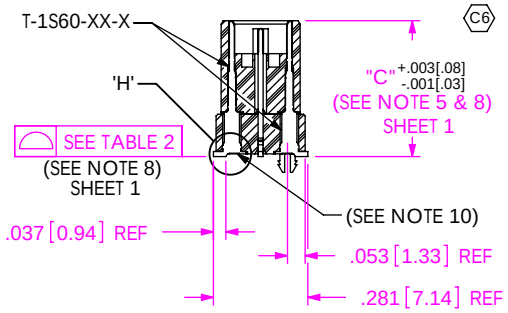

SECTION "B"-"B"

FIG. 4
(QTH-090-03-X-D-LC SHOWN)
[DIFFERENT AS SHOWN, OTHERWISE SAME AS FIG. 1]

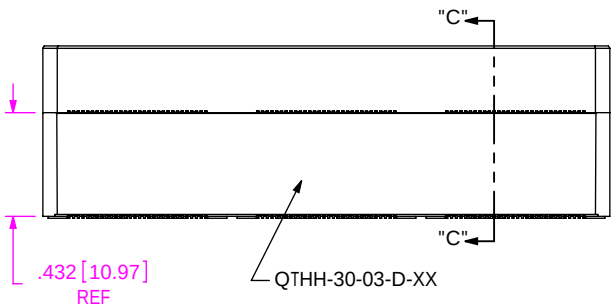

FIG. 5
(QTH-090-05-X-D SHOWN)
[DIFFERENT AS SHOWN, OTHERWISE SAME AS FIG. 3]

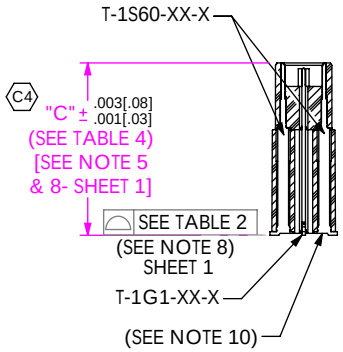

SECTION "C"-"C"
SCALE 1.25 : 1

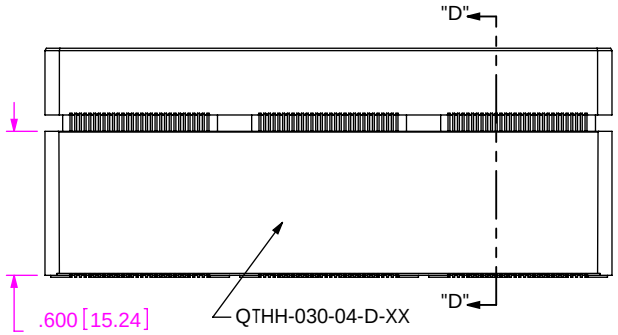

FIG. 6
(QTH-090-07-X-D SHOWN)
[DIFFERENT AS SHOWN, OTHERWISE SAME AS FIG. 3]

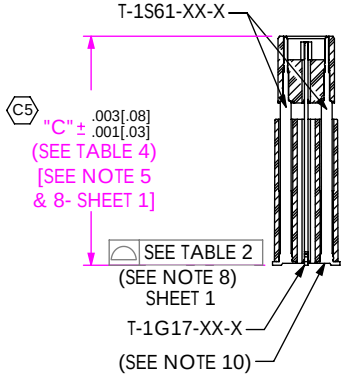

SECTION "D"-"D"
SCALE 1.25 : 1

PROPRIETARY NOTE
THIS DOCUMENT CONTAINS INFORMATION CONFIDENTIAL AND PROPRIETARY TO SAMTEC, INC. AND SHALL NOT BE REPRODUCED OR TRANSFERRED TO OTHER DOCUMENTS OR DISCLOSED TO OTHERS OR USED FOR ANY PURPOSE OTHER THAN THAT WHICH IT WAS OBTAINED WITHOUT THE EXPRESSED WRITTEN CONSENT OF SAMTEC, INC.

DO NOT SCALE DRAWING

SHEET SCALE: 1:0.571429

samtec
520 PARK EAST BLVD, NEW ALBANY, IN 47150
PHONE: 812-944-6733 FAX: 812-948-5047
e-Mail: info@SAMTEC.com code: 55322

DESCRIPTION:
.5mm DOUBLE ROW HS TERMINAL ASSEMBLY

DWG. NO. QTH-XXX-XX-X-D-XXX

BY: DEAN P 5/27/1999 SHEET 3 OF 5

F:\DWG\MISC\MKTG\QTH-XXX-XX-X-D-XXX-MKT.SLDDRW

REVISION AS

FIG. 7

(QTH-090-01-X-D-GP SHOWN)
[DIFFERENT AS SHOWN, OTHERWISE SAME AS FIG. 1]
(AVAILABLE ON -01 & -02 ONLY)

TABLE 5		
STYLE	"D"	BODY
-01	.363[9.22]	QTH-30-01-D-XX-X-GP
-02	.481[12.22]	QTH-30-02-D-XX-X-GP

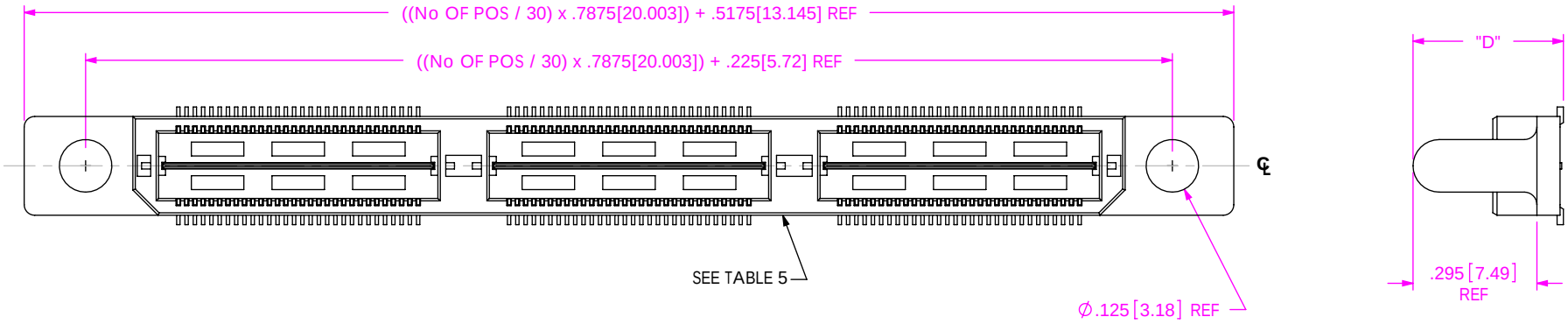

FIG. 8

-FL: FRICTION LOCKS
(ONLY AVAILABLE ON -01 & -02 LEAD STYLES)
(NOT AVAILABLE WITH -GP OPTION)
(SAME AS FIG. 1, UNLESS OTHERWISE STATED)

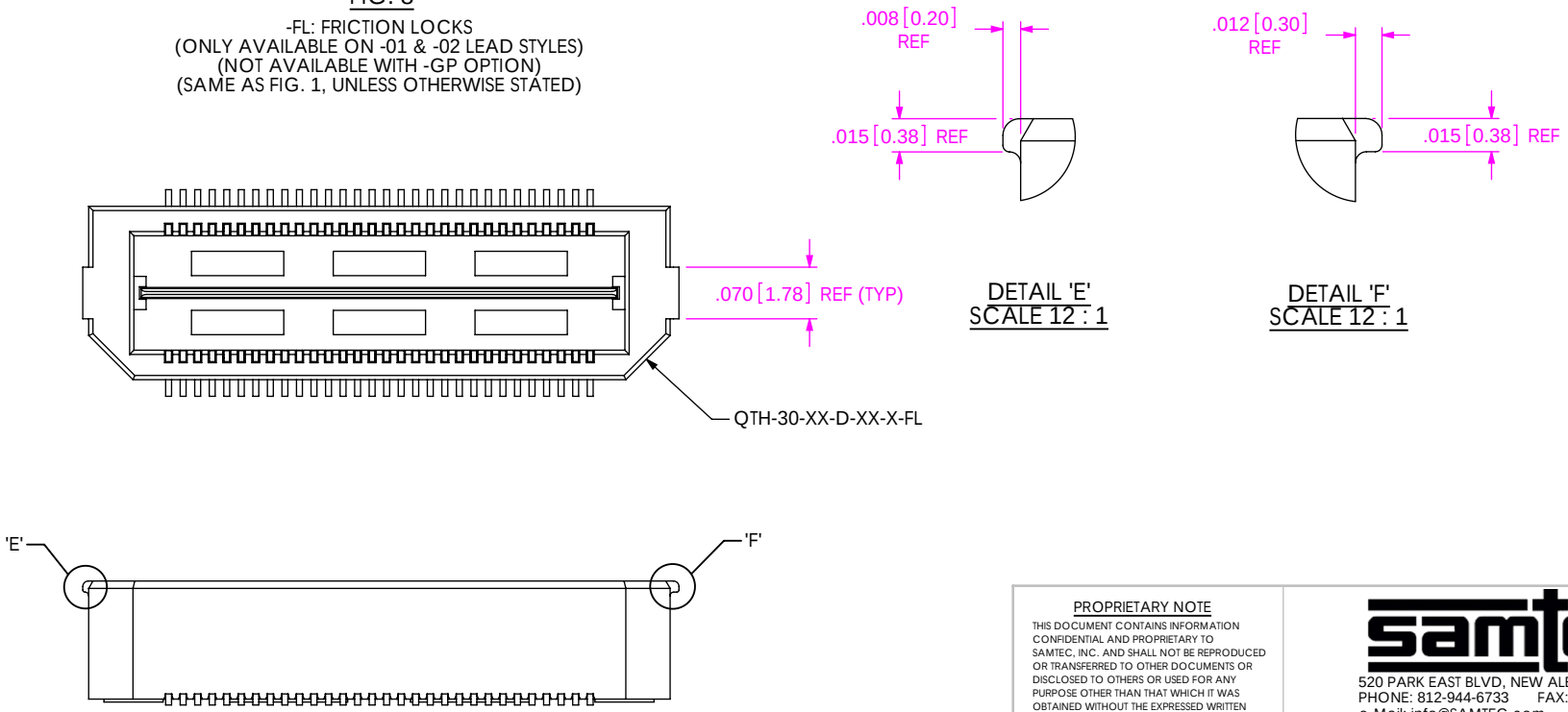

DETAIL 'E'
SCALE 12 : 1

DETAIL 'F'
SCALE 12 : 1

PROPRIETARY NOTE
THIS DOCUMENT CONTAINS INFORMATION CONFIDENTIAL AND PROPRIETARY TO SAMTEC, INC. AND SHALL NOT BE REPRODUCED OR TRANSFERRED TO OTHER DOCUMENTS OR DISCLOSED TO OTHERS OR USED FOR ANY PURPOSE OTHER THAN THAT WHICH IT WAS OBTAINED WITHOUT THE EXPRESSED WRITTEN CONSENT OF SAMTEC, INC.

DO NOT SCALE DRAWING

SHEET SCALE: 2.5:1

samtec
520 PARK EAST BLVD, NEW ALBANY, IN 47150
PHONE: 812-944-6733 FAX: 812-948-5047
e-Mail: info@SAMTEC.com code: 55322

DESCRIPTION: .5mm DOUBLE ROW HS TERMINAL ASSEMBLY

DWG. NO. QTH-XXX-XX-X-D-XXX

BY: DEAN P 5/27/1999

F:\DWG\MISC\MKTG\QTH-XXX-XX-X-D-XXX-MKT.SLDDRW

REVISION AS

FIG. 9

(QTH-090-01-X-D-A-RT1 SHOWN)
[NOT AVAILABLE WITH -LC, -GP, OR -FL OPTIONS]
(AVAILABLE ON -01 ONLY)

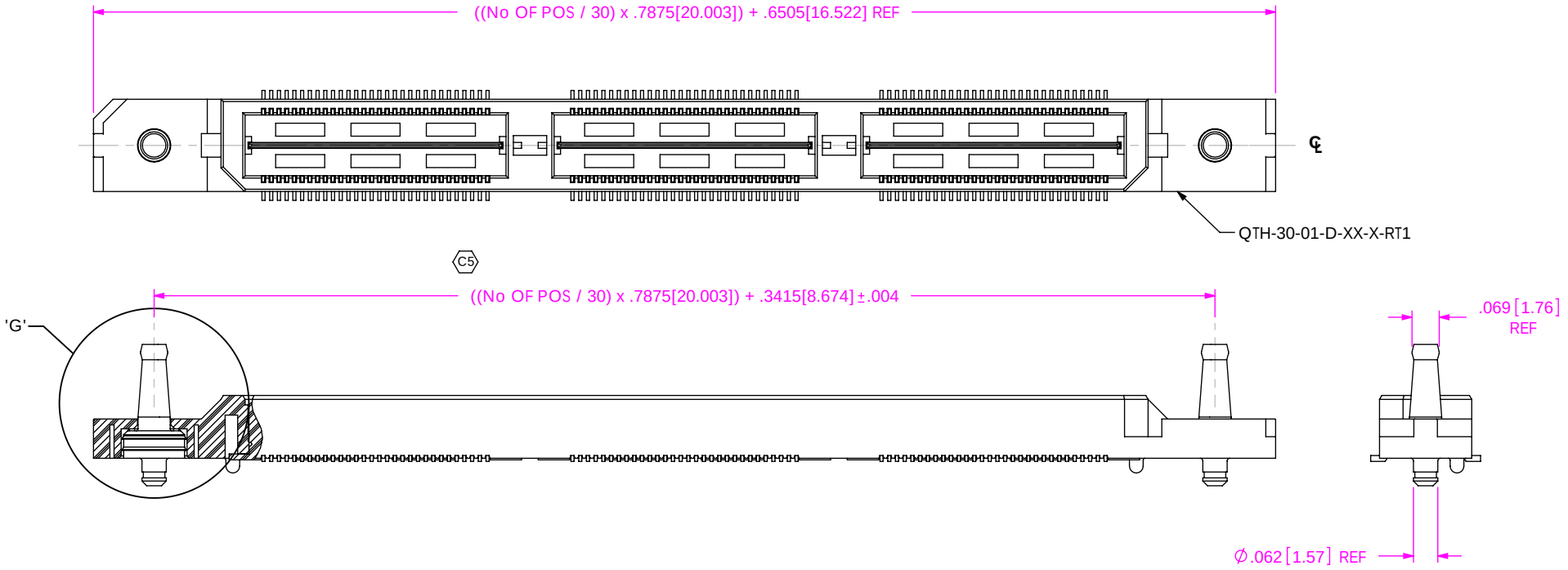

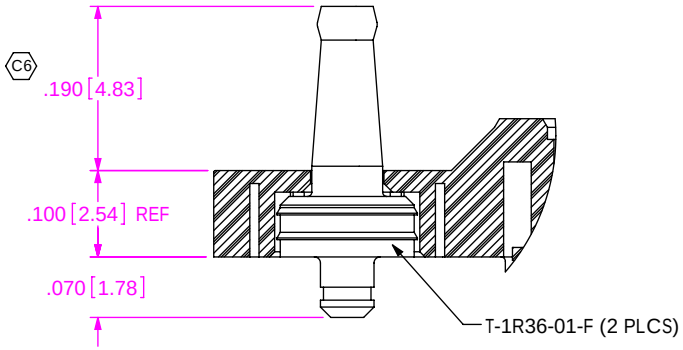

DETAIL 'G'
SCALE 4.5 : 1

F:\DWG\MISC\MKTG\QTH-XXX-XX-X-D-XXX-MKT.SLDDRW

PROPRIETARY NOTE

THIS DOCUMENT CONTAINS INFORMATION CONFIDENTIAL AND PROPRIETARY TO SAMTEC, INC. AND SHALL NOT BE REPRODUCED OR TRANSFERRED TO OTHER DOCUMENTS OR DISCLOSED TO OTHERS OR USED FOR ANY PURPOSE OTHER THAN THAT WHICH IT WAS OBTAINED WITHOUT THE EXPRESSED WRITTEN CONSENT OF SAMTEC, INC.

DO NOT SCALE DRAWING

SHEET SCALE: 2.5:1

520 PARK EAST BLVD, NEW ALBANY, IN 47150
PHONE: 812-944-6733 FAX: 812-948-5047
e-Mail: info@SAMTEC.com code: 55322

DESCRIPTION:
.5mm DOUBLE ROW HS TERMINAL ASSEMBLY

DWG. NO.
QTH-XXX-XX-X-D-XXX

BY: DEAN P 5/27/1999